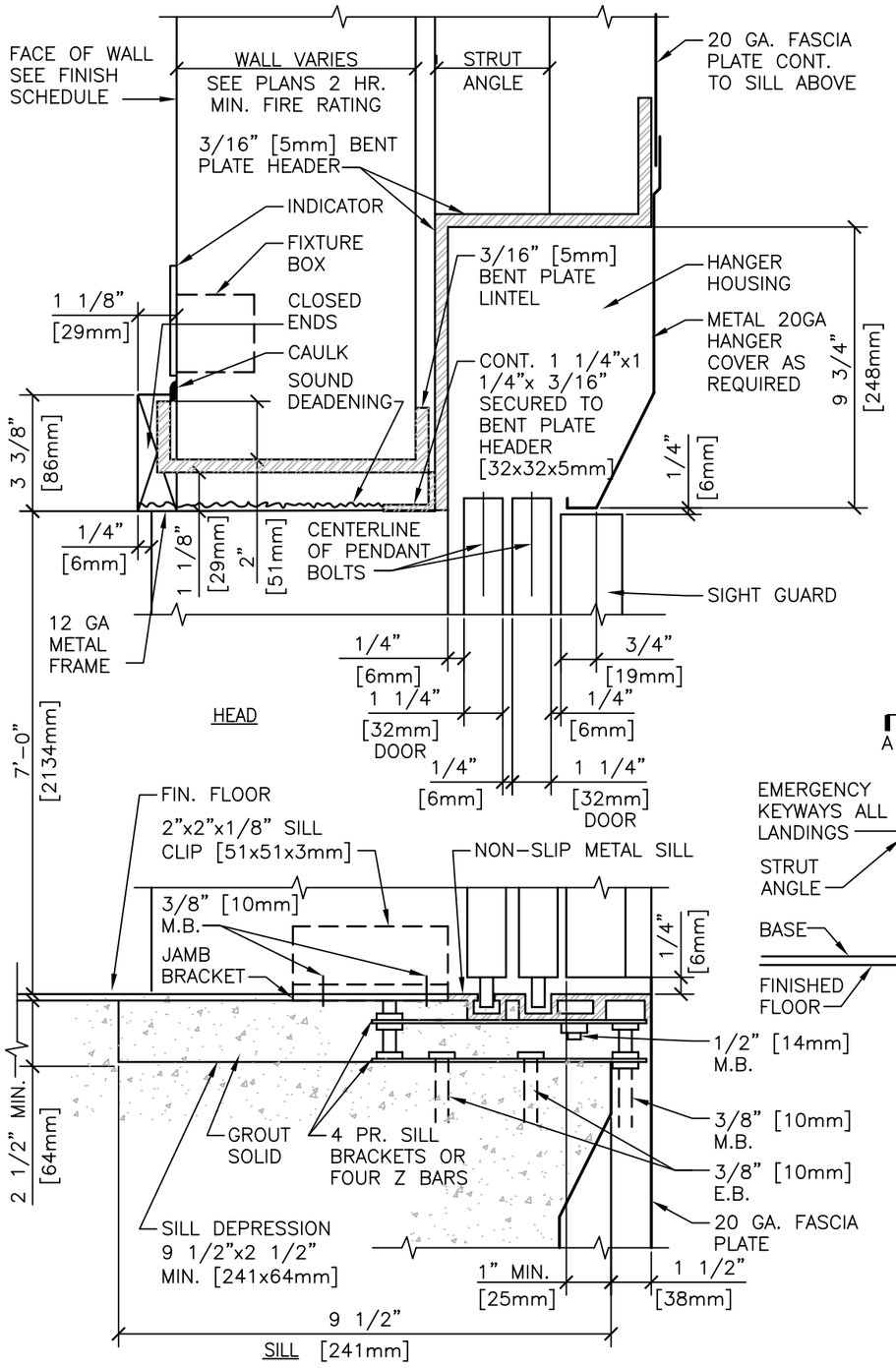


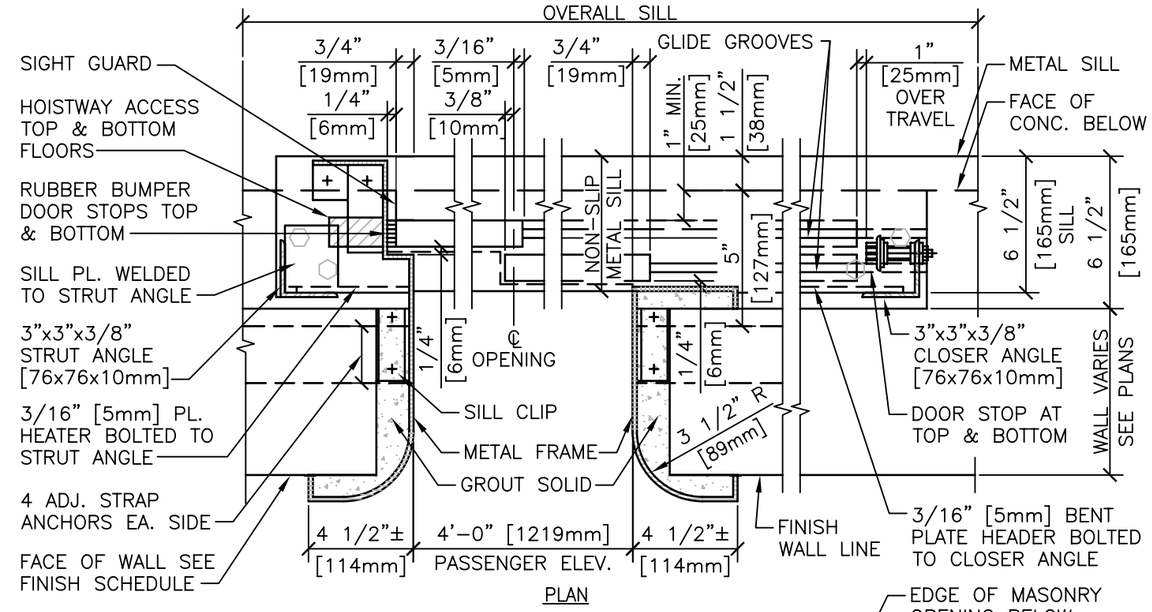


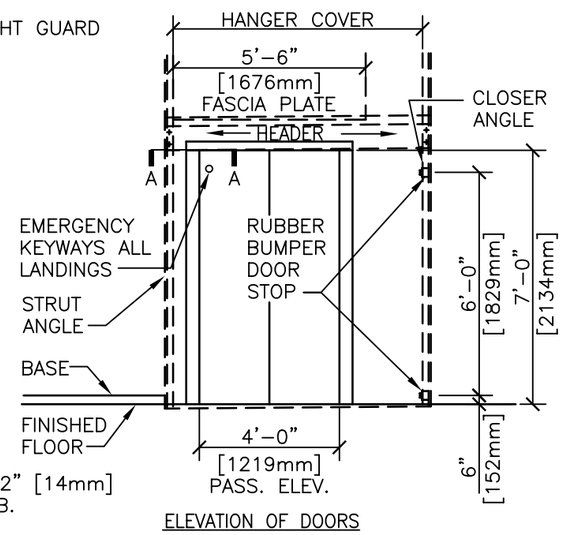


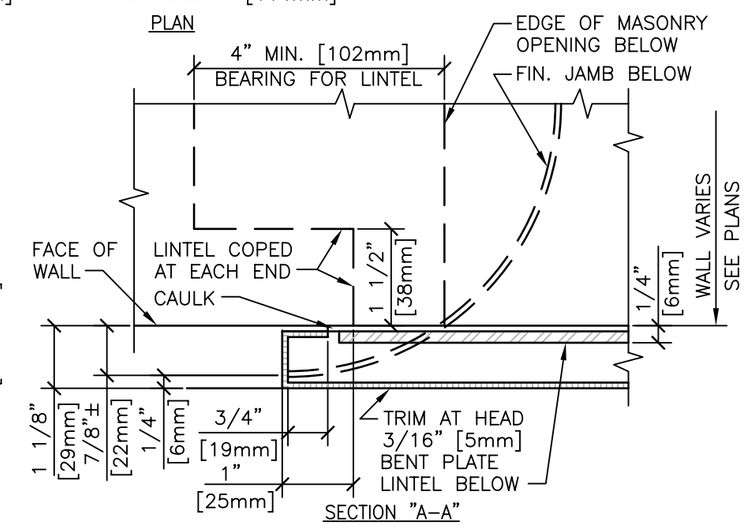


## NOTES:

1. HEAD AND JAMBS OF FINISHED FRAME SHALL BE SECURED TOGETHER WITH CONTINUOUS WELD.
2. ALL METAL GAGES AND FINISHES OF FRAME AND DOORS AS SPECIFIED.
3. FOR TOP FLOOR DUST COVER AND BOTTOM FLOOR TOE GUARD, SEE STANDARD DETAIL No. 14 21 00-03.
4. DOORS MAY BE RIGHT OR LEFT HAND – ARCHITECT TO SPECIFY.

# # ENTRANCE DETAILS - SERVICE AND PASSENGER ELECTRIC TRACTION OR HYDRAULIC ELEVATOR

NTS (TWO SPEED SLIDING DOORS)

DETAIL TITLE / ENTRANCE DETAILS
SERVICE AND PASSENGER ELECTRIC TRACTION OR HYDRAULIC ELEVATOR
(TWO SPEED SLIDING DOORS)

SCALE :NONE

DATE ISSUED: DECEMBER 2008

CAD DETAIL NO.: SD142100-02.DWG

Department of Veterans Affairs